USER MANUAL

AGRIMATE®

Maximum **Power** - Super **Economy**

INTERCULTIVATOR / POWER WEEDER

AM-MPT- 9D/6D

MANUAL ☐ ELECTRIC ☐ DGB ☐

Transmission Case Comp-A

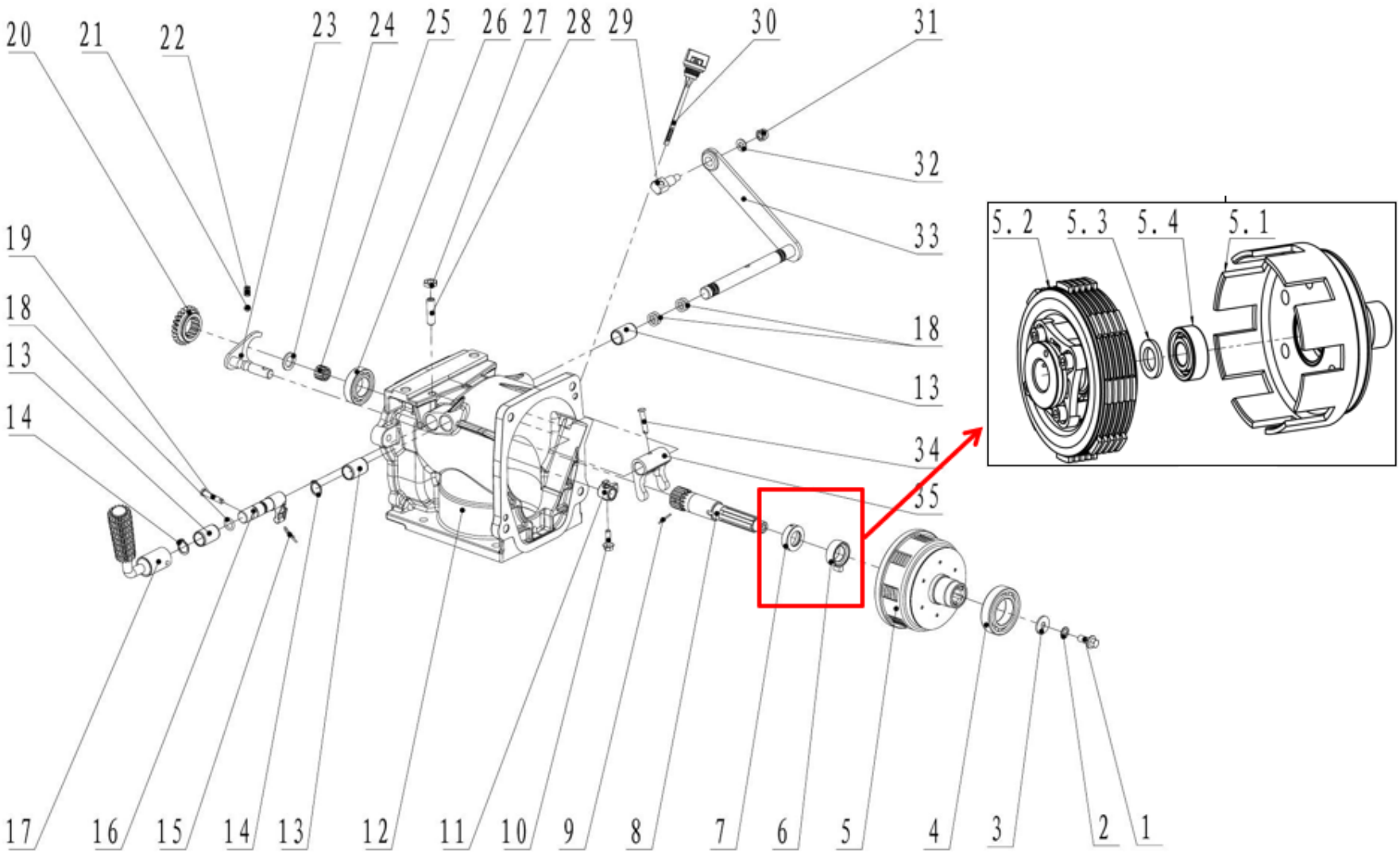

TRANSMISSION DIAGRAM & SPARE PARTS LIST OF AM-MPT-1100-9D/6D / DGB

SL NO	PART NO	DESCRIPTION	SL NO	PART NO	DESCRIPTION
1	AM-MPT-1100-9D-TA-01	Bolt	13	AM-MPT-1100-9D-TA-13	Bush
2	AM-MPT-1100-9D-TA-02	Locked washer	14	AM-MPT-1100-9D-TA-14	Spring washer
3	AM-MPT-1100-9D-TA-03	Big washer	15	AM-MPT-1100-9D-TA-15	Circlip F
4	AM-MPT-1100-9D-TA-04	Ball bearing	16	AM-MPT-1100-9D-TA-16	Shift gear rocker
5	AM-MPT-1100-9D-TA-05	Clutch comp	17	AM-MPT-1100-9D-TA-17	Vice speed handle
5.1	AM-MPT-1100-9D-TA-5.1	Clutch cover assembly (spheroidal iron)	18	AM-MPT-1100-9D-TA-18	O-ring
5.2	AM-MPT-1100-9D-TA-5.2	Clutch core assembly (normally open)	19	AM-MPT-1100-9D-TA-19	Pin
5.3	AM-MPT-1100-9D-TA-5.3	Clutch gasket	20	AM-MPT-1100-9D-TA-20	Main shaft gear A
5.4	AM-MPT-1100-9D-TA-5.4	Deep groove ball bearings	21	AM-MPT-1100-9D-TA-21	steel ball
6	AM-MPT-1100-9D-TA-06	T09 Sheath	22	AM-MPT-1100-9D-TA-22	Shift gear spring
7	AM-MPT-1100-9D-TA-07	T09 friction tray	23	AM-MPT-1100-9D-TA-23	Vice speed fork
8	AM-MPT-1100-9D-TA-08	Input shaft	24	AM-MPT-1100-9D-TA-24	Wear washer
9	AM-MPT-1100-9D-TA-09	Split pin	25	AM-MPT-1100-9D-TA-25	Needle bearing
10	AM-MPT-1100-9D-TA-10	Bolt	26	AM-MPT-1100-9D-TA-26	Ball bearing
11	AM-MPT-1100-9D-TA-11	Vice speed striker	27	AM-MPT-1100-9D-TA-27	Thin nut
12	AM-MPT-1100-9D-TA-12	Transmission case	28	AM-MPT-1100-9D-TA-28	Pointless set screw

TRANSMISSION DIAGRAM & SPARE PARTS LIST OF AM-MPT-1100-9D/6D / DGB

SL NO	PART NO	DESCRIPTION	SL NO	PART NO	DESCRIPTION
29	AM-MPT-1100-9D-TA-29	Clutch cable seat			
30	AM-MPT-1100-9D-TA-30	II Oil ruler			
31	AM-MPT-1100-9D-TA-31	Locked nut			
32	AM-MPT-1100-9D-TA-32	Washer			
33	AM-MPT-1100-9D-TA-33	Clutch			
34	AM-MPT-1100-9D-TA-34	Pin			
35	AM-MPT-1100-9D-TA-35	Clutch fork			

Transmission Back Case Comp- B

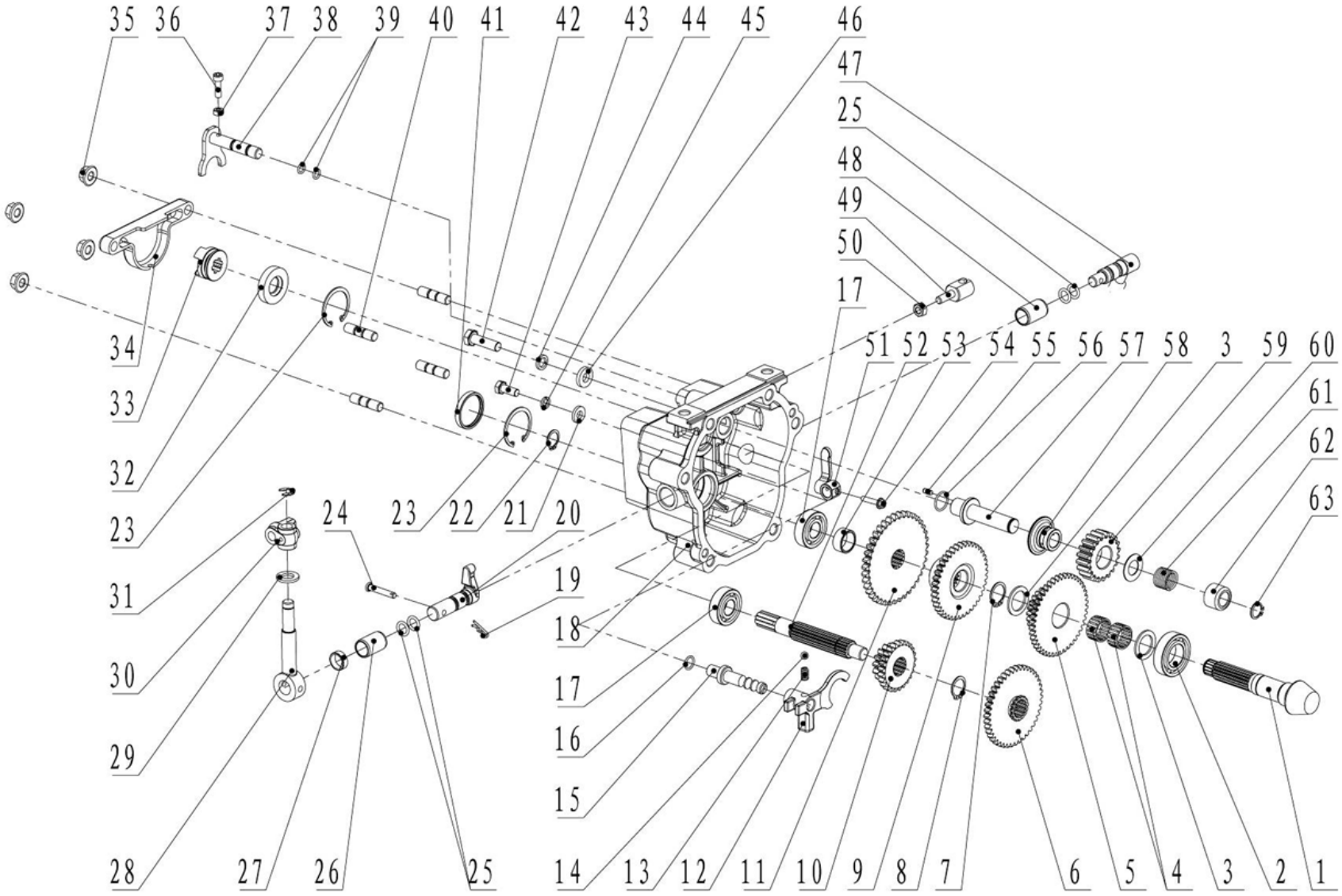

TRANSMISSION DIAGRAM & SPARE PARTS LIST OF AM-MPT-1100-9D/6D / DGB

SL NO	PART NO	DESCRIPTION	SL NO	PART NO	DESCRIPTION
1	AM-MPT-1100-9D-TB-01	Vice shaft	17	AM-MPT-1100-9D-TB-17	Ball bearing
2	AM-MPT-1100-9D-TB-02	Ball bearing	18	AM-MPT-1100-9D-TB-18	Back case cover
3	AM-MPT-1100-9D-TB-03	Adjustment washer	19	AM-MPT-1100-9D-TB-19	Circlip F
4	AM-MPT-1100-9D-TB-04	Needle bearing	20	AM-MPT-1100-9D-TB-20	Shif gear rocker
5	AM-MPT-1100-9D-TB-05	Vice shaft double teeth gear A	21	AM-MPT-1100-9D-TB-21	Gasket
6	AM-MPT-1100-9D-TB-06	Main shaft gear B	22	AM-MPT-1100-9D-TB-22	Spring washer
7	AM-MPT-1100-9D-TB-07	Spring washer	23	AM-MPT-1100-9D-TB-23	Ring for hole
8	AM-MPT-1100-9D-TB-08	Spring washer	24	AM-MPT-1100-9D-TB-24	Pin
9	AM-MPT-1100-9D-TB-09	Vice shaft fast gear	25	AM-MPT-1100-9D-TB-25	O-ring
10	AM-MPT-1100-9D-TB-10	Main shaft double teeth gear	26	AM-MPT-1100-9D-TB-26	Bush
11	AM-MPT-1100-9D-TB-11	Vice shaft slow gear	27	AM-MPT-1100-9D-TB-27	Restrict sheath
12	AM-MPT-1100-9D-TB-12	Shift gear fork	28	AM-MPT-1100-9D-TB-28	Shift gear sheath
13	AM-MPT-1100-9D-TB-13	Shift gear spring	29	AM-MPT-1100-9D-TB-29	Gasket
14	AM-MPT-1100-9D-TB-14	steel ball	30	AM-MPT-1100-9D-TB-30	PTO gemel B
15	AM-MPT-1100-9D-TB-15	Shift gear fork shaft	31	AM-MPT-1100-9D-TB-31	Split washer
16	AM-MPT-1100-9D-TB-16	O-ring	32	AM-MPT-1100-9D-TB-32	Lip seal

TRANSMISSION DIAGRAM & SPARE PARTS LIST OF AM-MPT-1100-9D/6D / DGB

SL NO	PART NO	DESCRIPTION	SL NO	PART NO	DESCRIPTION
33	AM-MPT-1100-9D-TB-33	Output slutch push dog	49	AM-MPT-1100-9D-TB-49	Reverse cable seat
34	AM-MPT-1100-9D-TB-34	Plastic clutch cover	50	AM-MPT-1100-9D-TB-50	Bolt
35	AM-MPT-1100-9D-TB-35	Nut	51	AM-MPT-1100-9D-TB-51	Reverse fork
36	AM-MPT-1100-9D-TB-36	Bolt	52	AM-MPT-1100-9D-TB-52	Main shaft
37	AM-MPT-1100-9D-TB-37	Nut	53	AM-MPT-1100-9D-TB-53	Sheath
38	AM-MPT-1100-9D-TB-38	Output fork	54	AM-MPT-1100-9D-TB-54	Bolt
39	AM-MPT-1100-9D-TB-39	O-rng	55	AM-MPT-1100-9D-TB-55	Cylindrical pin
40	AM-MPT-1100-9D-TB-40	Stud bolt	56	AM-MPT-1100-9D-TB-56	O-ring
41	AM-MPT-1100-9D-TB-41	Oil plug	57	AM-MPT-1100-9D-TB-57	Reverse shaft
42	AM-MPT-1100-9D-TB-42	Bolt	58	AM-MPT-1100-9D-TB-58	Reverse push plate
43	AM-MPT-1100-9D-TB-43	Bolt	59	AM-MPT-1100-9D-TB-59	Reverse gear
44	AM-MPT-1100-9D-TB-44	Spring washer	60	AM-MPT-1100-9D-TB-60	Wear washer
45	AM-MPT-1100-9D-TB-45	Spring washer	61	AM-MPT-1100-9D-TB-61	Reverse spring
46	AM-MPT-1100-9D-TB-46	Reverse gear shaft washer	62	AM-MPT-1100-9D-TB-62	Reverse restrict sheath
47	AM-MPT-1100-9D-TB-47	Reverse gear fork shaft	63	AM-MPT-1100-9D-TB-63	Spring washer
48	AM-MPT-1100-9D-TB-48	Fork sheath			

Transmission Back Case Comp- BN (Improved)

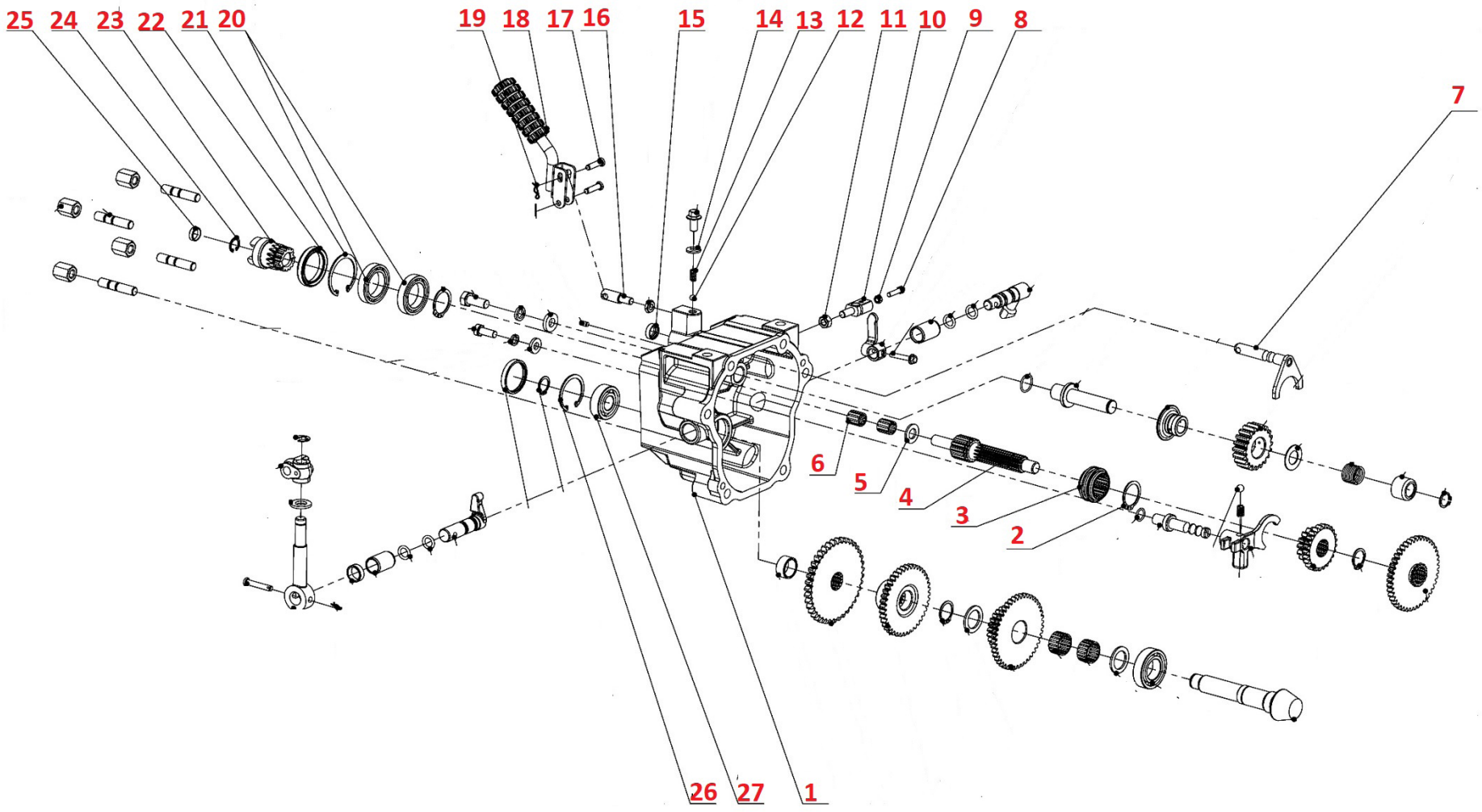

SL NO	PART NO	DESCRIPTION	SL NO	PART NO	DESCRIPTION
1	AM-MPT-1100-9D-TBN-01	Transmission case back cover	17	AM-MPT-1100-9D-TBN-17	Pin
2	AM-MPT-1100-9D-TBN-02	Shaft circlip	18	AM-MPT-1100-9D-TBN-18	output clutch handle
3	AM-MPT-1100-9D-TBN-03	Coupling sleeve	19	AM-MPT-1100-9D-TBN-19	circlip A
4	AM-MPT-1100-9D-TBN-04	Spindle	20	AM-MPT-1100-9D-TBN-20	Deep groove ball bearing
5	AM-MPT-1100-9D-TBN-05	Wear washer	21	AM-MPT-1100-9D-TBN-21	Circlips for holes
6	AM-MPT-1100-9D-TBN-06	Needle bearing	22	AM-MPT-1100-9D-TBN-22	Oil seal
7	AM-MPT-1100-9D-TBN-07	Output clutch fork	23	AM-MPT-1100-9D-TBN-23	PTO shaft
8	AM-MPT-1100-9D-TBN-08	Hexagon head bolt	24	AM-MPT-1100-9D-TBN-24	Circlips for holes
9	AM-MPT-1100-9D-TBN-09	Hex Nut	25	AM-MPT-1100-9D-TBN-25	Oil plug
10	AM-MPT-1100-9D-TBN-10	clutch cable seat	26	AM-MPT-1100-9D-TBN-26	Circlips for holes
11	AM-MPT-1100-9D-TBN-11	Hex Nut	27	AM-MPT-1100-9D-TBN-27	Deep groove ball bearing
12	AM-MPT-1100-9D-TBN-12	Steel ball			
13	AM-MPT-1100-9D-TBN-13	Gear spring			
14	AM-MPT-1100-9D-TBN-14	Gasket			
15	AM-MPT-1100-9D-TBN-15	Non-standard oil seal			
16	AM-MPT-1100-9D-TBN-16	support rod			

Transmission Back case comp- C

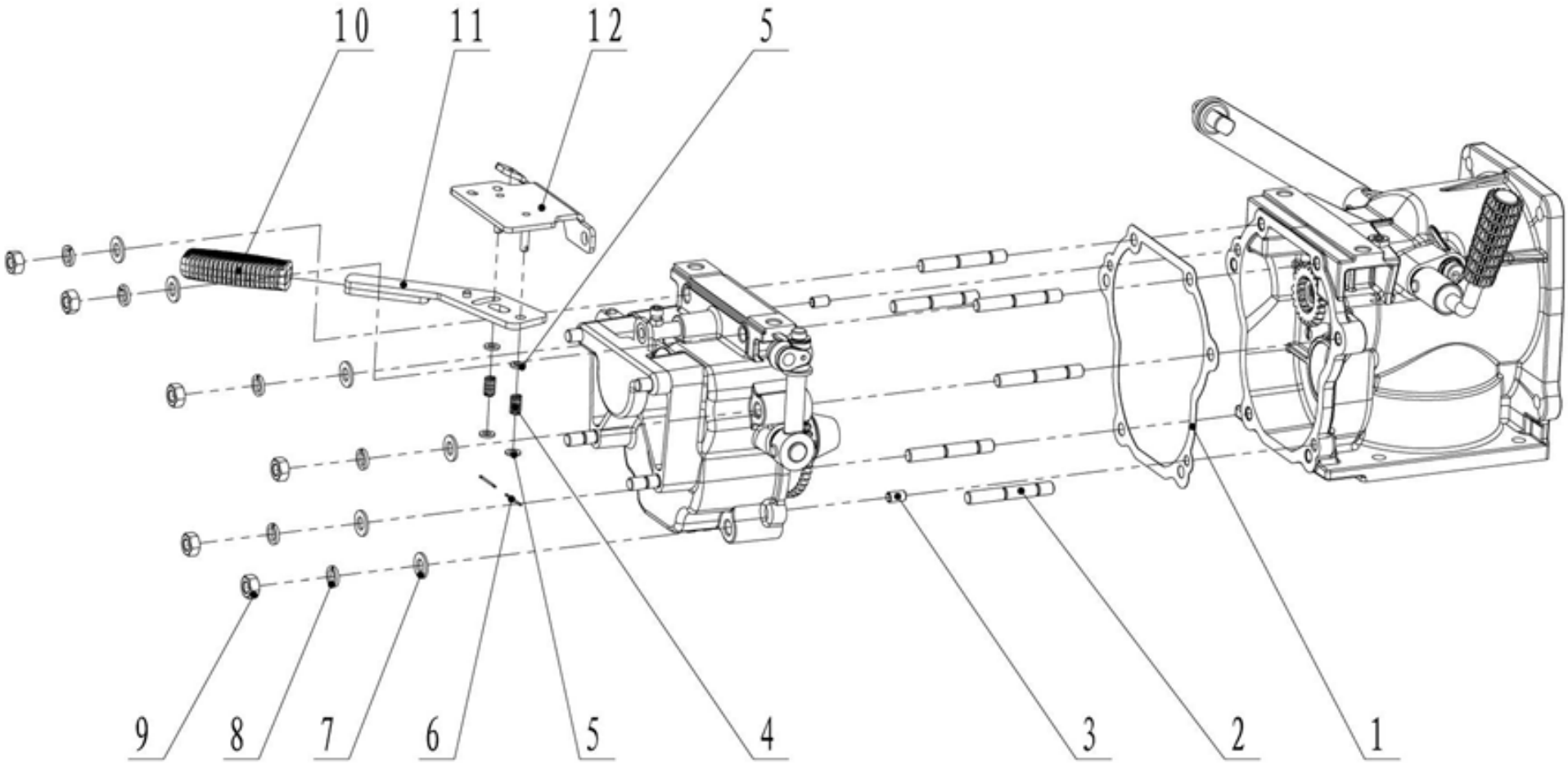

TRANSMISSION DIAGRAM & SPARE PARTS LIST OF AM-MPT-1100-9D/6D / DGB

SL NO	PART NO	DESCRIPTION	SL NO	PART NO	DESCRIPTION
1	AM-MPT-1100-9D-TC-01	Combination gasket			
2	AM-MPT-1100-9D-TC-02	Stud bolt			
3	AM-MPT-1100-9D-TC-03	Dowel pin			
4	AM-MPT-1100-9D-TC-04	Output clutch srping			
5	AM-MPT-1100-9D-TC-05	Washer			
6	AM-MPT-1100-9D-TC-06	Split pin			
7	AM-MPT-1100-9D-TC-07	Washer			
8	AM-MPT-1100-9D-TC-08	Spring washer			
9	AM-MPT-1100-9D-TC-09	Nut			
10	AM-MPT-1100-9D-TC-10	Handle rubber			
11	AM-MPT-1100-9D-TC-11	Output clutch grip			
12	AM-MPT-1100-9D-TC-12	Output clutch frame			

Transmission combination parts- C N

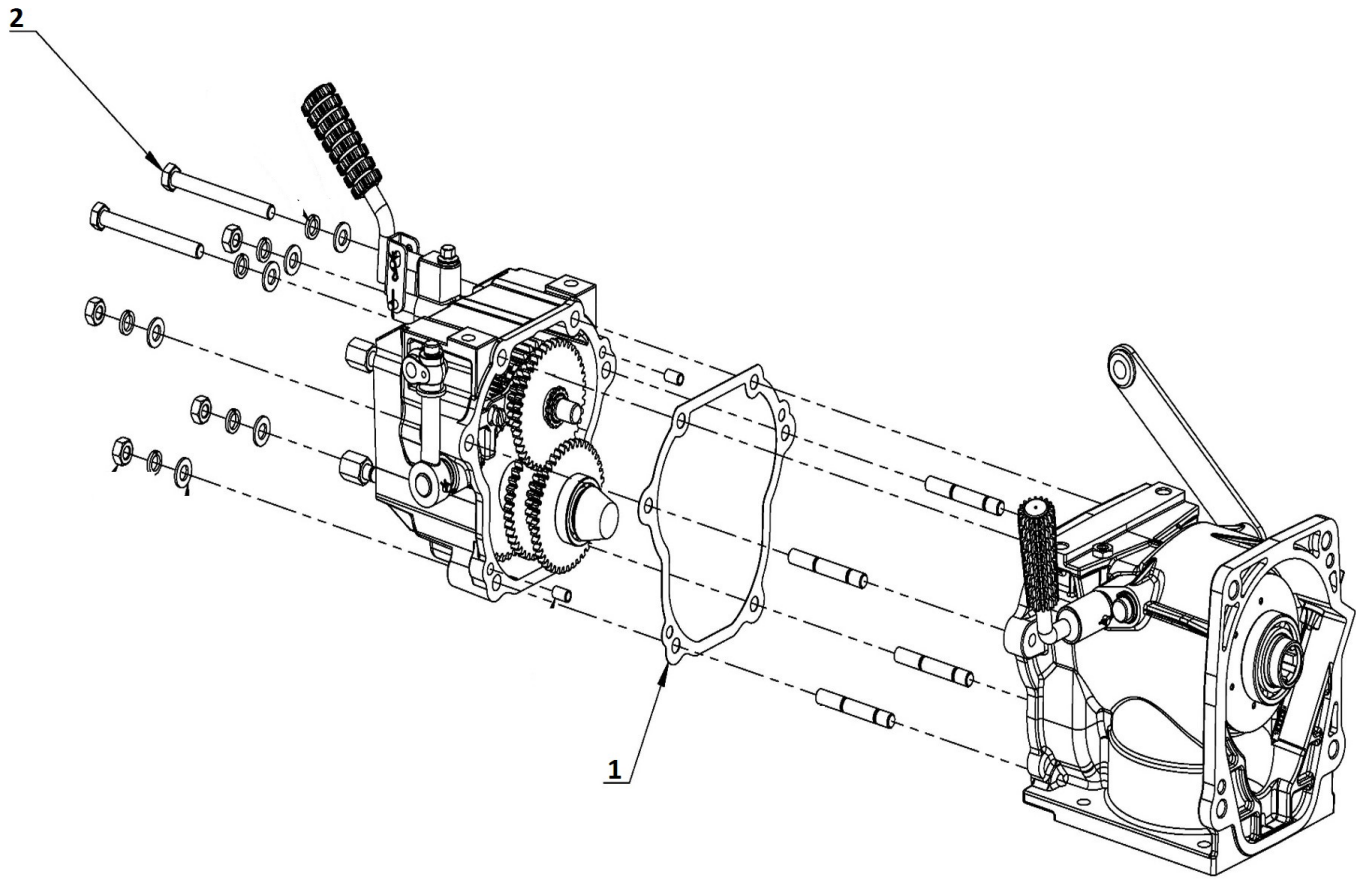

SL NO	PART NO	DESCRIPTION
1	AM-MPT-1100-9D-TCN-01	Back cover closing paper pad
2	AM-MPT-1100-9D-TCN-02	Hexagon head bolt

Walking case comp - D

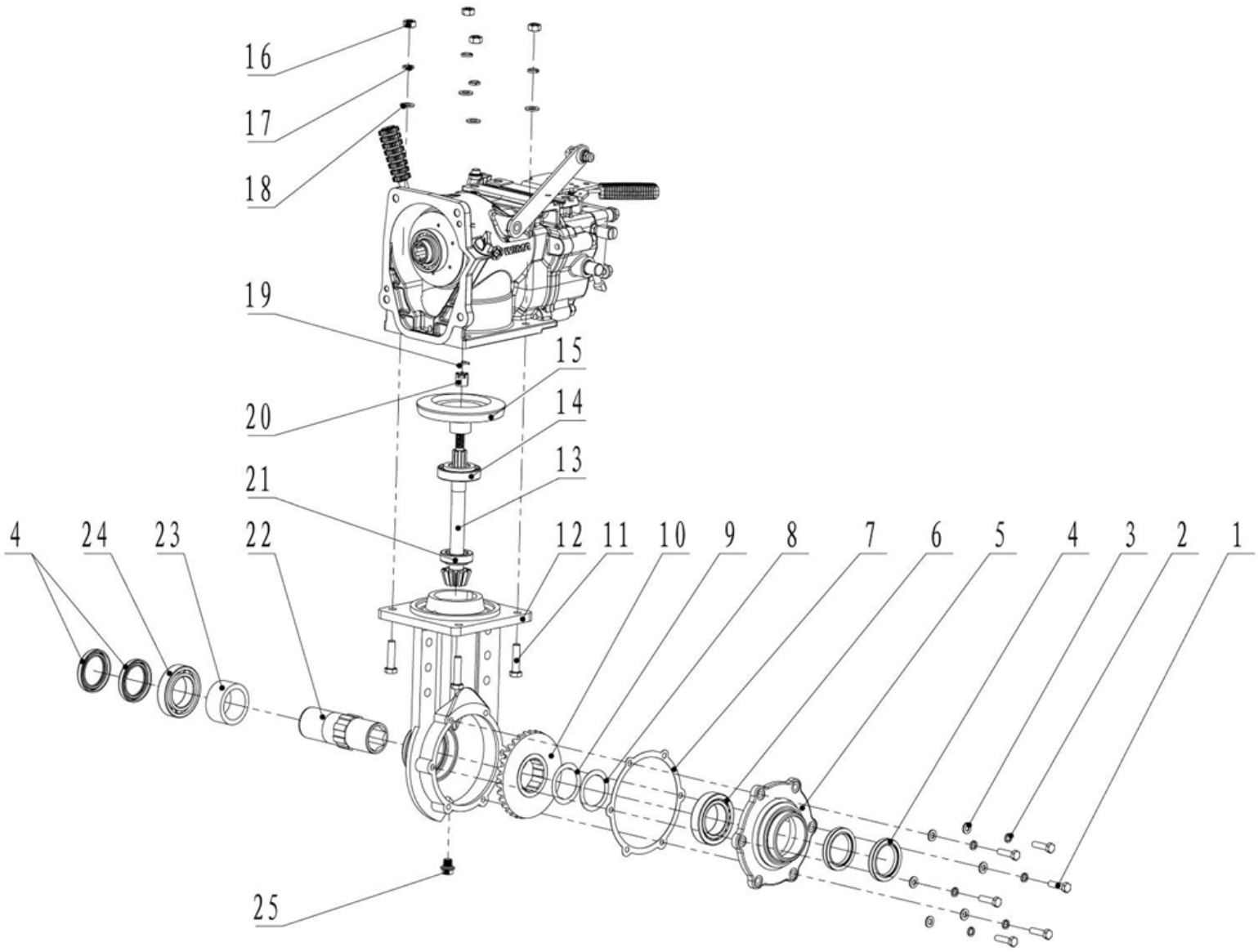

TRANSMISSION DIAGRAM & SPARE PARTS LIST OF AM-MPT-1100-9D/6D / DGB

SL NO	PART NO	DESCRIPTION	SL NO	PART NO	DESCRIPTION
1	AM-MPT-1100-9D-TD-01	Bolt	17	AM-MPT-1100-9D-TD-17	Spring washer
2	AM-MPT-1100-9D-TD-02	Spring washer	18	AM-MPT-1100-9D-TD-18	Gasket
3	AM-MPT-1100-9D-TD-03	Gasket	19	AM-MPT-1100-9D-TD-19	Split pin
4	AM-MPT-1100-9D-TD-04	Lip seal	20	AM-MPT-1100-9D-TD-20	Slotted nut
5	AM-MPT-1100-9D-TD-05	Walking case end cover	21	AM-MPT-1100-9D-TD-21	Tappered roller bearing
6	AM-MPT-1100-9D-TD-06	Tappered roller bearing	22	AM-MPT-1100-9D-TD-22	Inner haxed output sheath
7	AM-MPT-1100-9D-TD-07	End cover gasket	23	AM-MPT-1100-9D-TD-23	Output shaft sheath
8	AM-MPT-1100-9D-TD-08	Adjustment gasket	24	AM-MPT-1100-9D-TD-24	Ball bearing
9	AM-MPT-1100-9D-TD-09	Adjustment gasket	25	AM-MPT-1100-9D-TD-25	Drain bolt
10	AM-MPT-1100-9D-TD-10	Walking umbrella gear			
11	AM-MPT-1100-9D-TAD-11	Bolt			
12	AM-MPT-1100-9D-TD-12	Walking case			
13	AM-MPT-1100-9D-TD-13	Umbrella gear shaft			
14	AM-MPT-1100-9D-TD-14	Tappered roller bearing			
15	AM-MPT-1100-9D-TD-15	Driven umbrella gear			
16	AM-MPT-1100-9D-TD-16	Bolt			

Tow Bar Comp -E

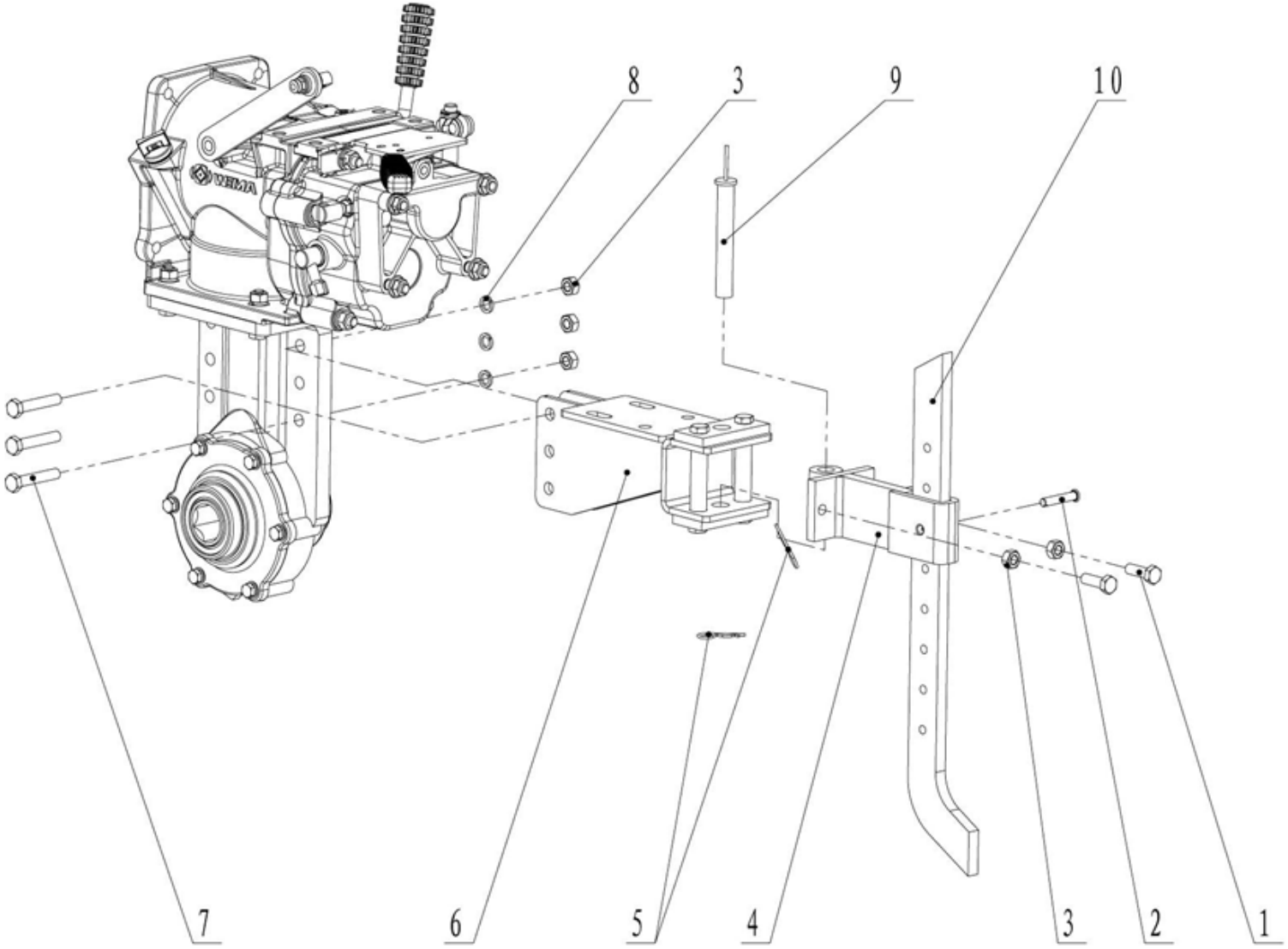

TRANSMISSION DIAGRAM & SPARE PARTS LIST OF AM-MPT-1100-9D/6D / DGB

SL NO	PART NO	DESCRIPTION	SL NO	PART NO	DESCRIPTION
1	AM-MPT-1100-9D-TE-01	Bolt			
2	AM-MPT-1100-9D-TE-02	Pin			
3	AM-MPT-1100-9D-TE-03	Nut			
4	AM-MPT-1100-9D-TE-04	Connection frame			
5	AM-MPT-1100-9D-TE-05	Clip B			
6	AM-MPT-1100-9D-TE-06	Tow bar			
7	AM-MPT-1100-9D-TE-07	Bolt			
8	AM-MPT-1100-9D-TE-08	Spring washer			
9	AM-MPT-1100-9D-TE-09	Pin with ring			
10	AM-MPT-1100-9D-TE-10	Resistance rod			

KM handle Bar Comp(Usually open clutch) -F

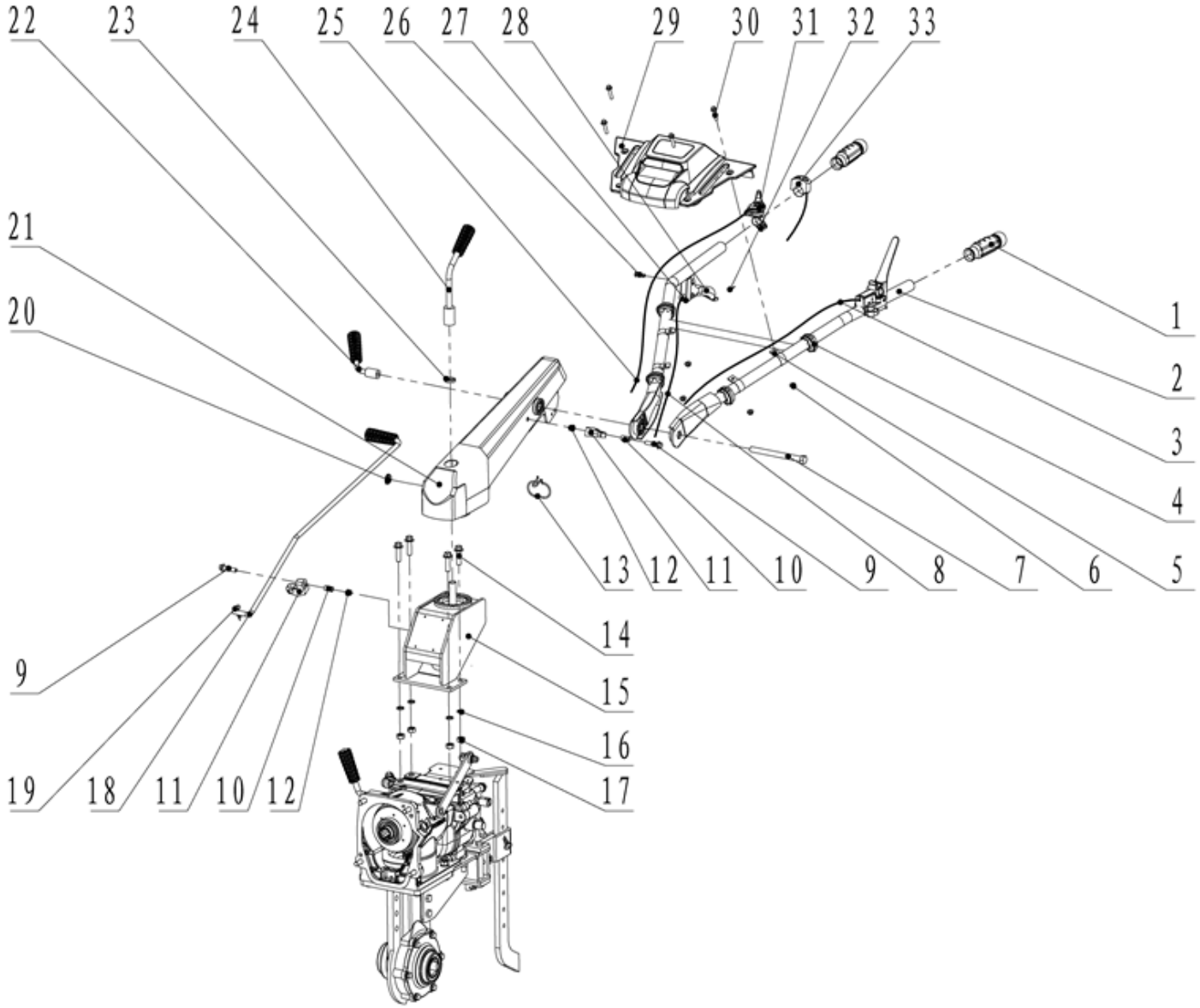

TRANSMISSION DIAGRAM & SPARE PARTS LIST OF AM-MPT-1100-9D/6D / DGB

SL NO	PART NO	DESCRIPTION	SL NO	PART NO	DESCRIPTION
1	AM-MPT-1100-9D-TF-01	handle rubber	17	AM-MPT-1100-9D-TF-17	Nut
2	AM-MPT-1100-9D-TF-02	Handle frame	18	AM-MPT-1100-9D-TAF-18	Shift gear rod
3	AM-MPT-1100-9D-TF-03	III usually open clutch cable	19	AM-MPT-1100-9D-TF-19	Clip B
4	AM-MPT-1100-9D-TF-04	Cable clip	20	AM-MPT-1100-9D-TF-20	Plug
5	AM-MPT-1100-9D-TF-05	Handle fram connection piece	21	AM-MPT-1100-9D-TF-21	handle seat
6	AM-MPT-1100-9D-TF-06	Nut	22	AM-MPT-1100-9D-TF-22	Locked grip
7	AM-MPT-1100-9D-TF-07	Bolt	23	AM-MPT-1100-9D-TF-23	Spring washer
8	AM-MPT-1100-9D-TF-08	reverse cable	24	AM-MPT-1100-9D-TF-24	Locked turning handel
9	AM-MPT-1100-9D-TF-09	Bolt	25	AM-MPT-1100-9D-TF-25	Oil cable
10	AM-MPT-1100-9D-TF-10	Sleeve	26	AM-MPT-1100-9D-TF-26	Pin
11	AM-MPT-1100-9D-TF-11	Shift gear rod limit block	27	AM-MPT-1100-9D-TF-27	Reverse locked grip
12	AM-MPT-1100-9D-TF-12	Locked nut	28	AM-MPT-1100-9D-TF-28	Reverse grip
13	AM-MPT-1100-9D-TF-13	Cable circle	29	AM-MPT-1100-9D-TF-29	Tool box
14	AM-MPT-1100-9D-TF-14	Bolt	30	AM-MPT-1100-9D-TF-30	Bolt
15	AM-MPT-1100-9D-TF-15	buttom seat	31	AM-MPT-1100-9D-TF-31	Oil switch
16	AM-MPT-1100-9D-TF-16	Spring washer	32	AM-MPT-1100-9D-TF-32	Split
			33	AM-MPT-1100-9D-TF-33	CLUTCH LEVER

Engine and connections- G

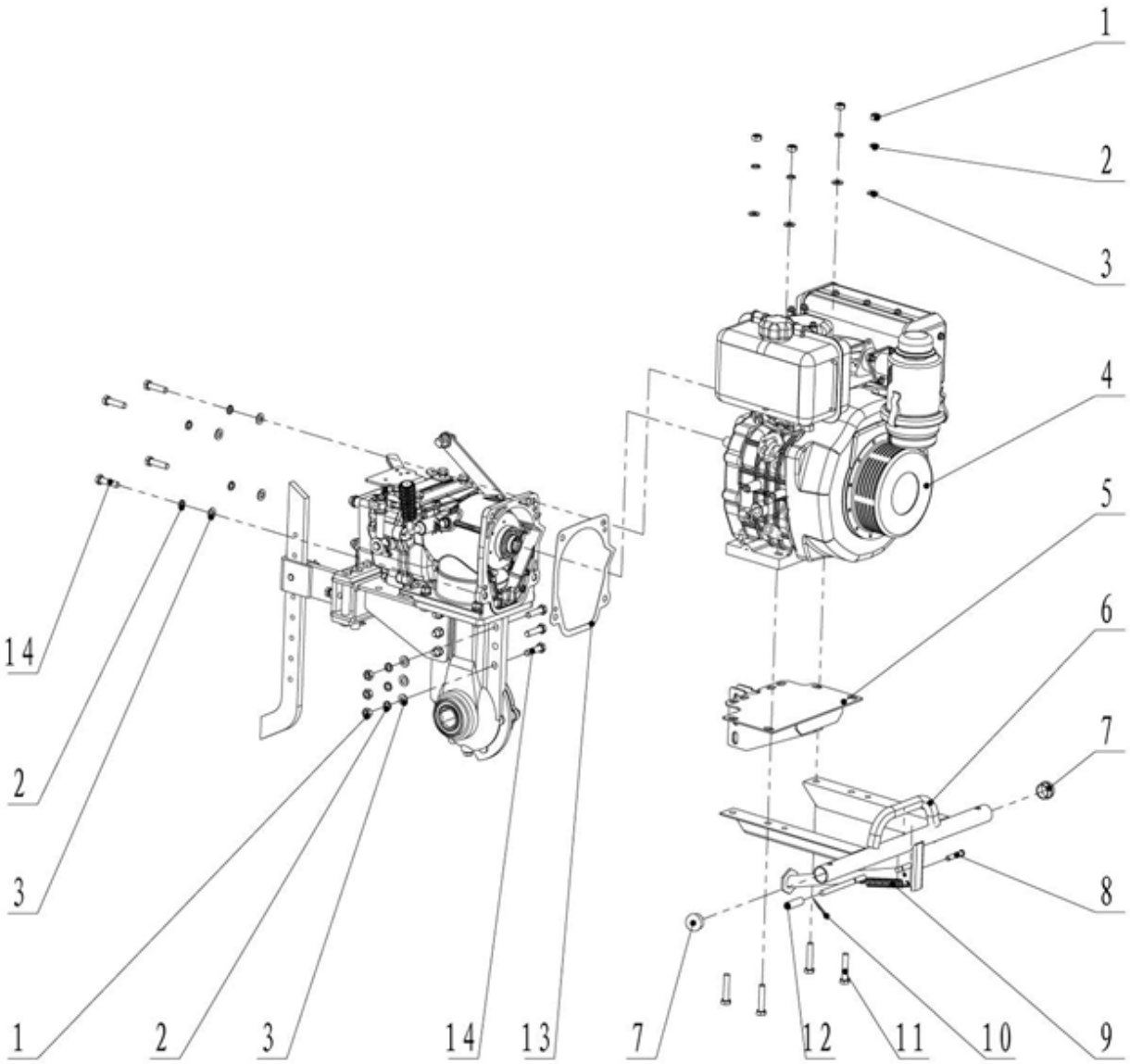

TRANSMISSION DIAGRAM & SPARE PARTS LIST OF AM-MPT-1100-9D/6D / DGB

SL NO	PART NO	DESCRIPTION	SL NO	PART NO	DESCRIPTION
1	AM-MPT-1100-9D-TG-01	Nut			
2	AM-MPT-1100-9D-TG-02	Spring Washer			
3	AM-MPT-1100-9D-TG-03	Gasket			
4	AM-MPT-1100-9D-TG-04	AM- 178F diesel engine for 6D			
		AM-186FB diesel engine for 9D			
5	AM-MPT-1100-9D-TG-05	Engine frame for 6D			
		Engine frame for 9D			
6	AM-MPT-1100-9D-TG-06	Bumper for 6D			
		Bumper for 9D			
7	AM-MPT-1100-9D-TG-07	Bumper stud			
8	AM-MPT-1100-9D-TG-08	Pin			
9	AM-MPT-1100-9D-TG-09	Bumper supporter drawing spring			
10	AM-MPT-1100-9D-TG-10	Clip B			
11	AM-MPT-1100-9D-TG-11	Bolt			
12	AM-MPT-1100-9D-TG-12	Small shake handle			
13	AM-MPT-1100-9D-TG-13	II flange gasket			

Engine & Connections - H

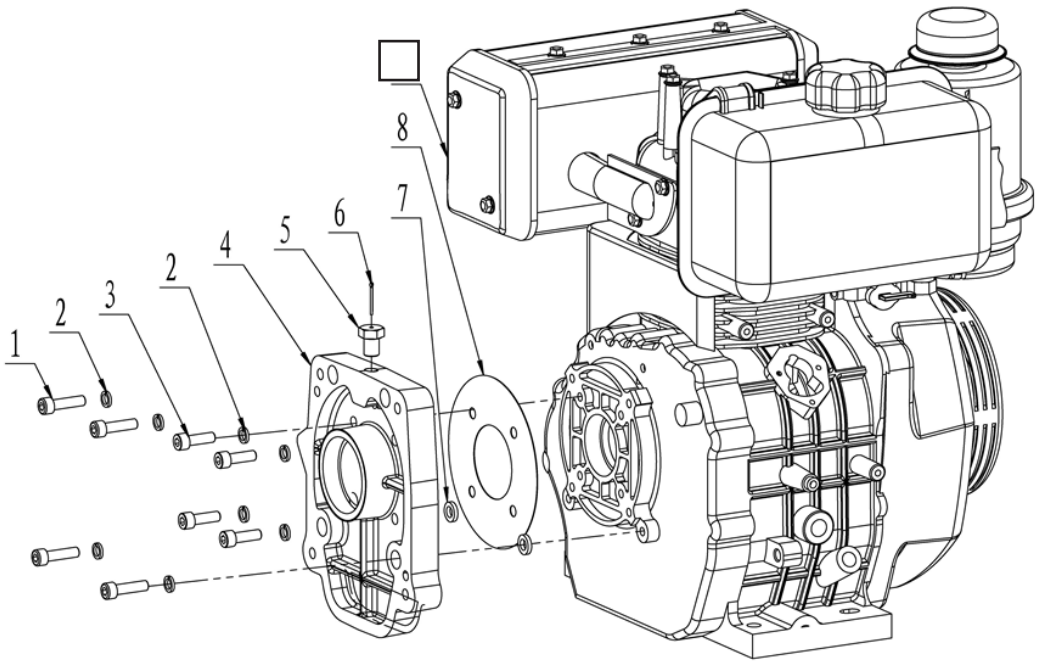

SL NO	PART NO	DESCRIPTION
1	AM-MPT-1100-9D-TH-01	Hexagon socket head screw
2	AM-MPT-1100-9D-TH-02	Spring washer
3	AM-MPT-1100-9D-TH-03	Hexagon socket head screw
4	AM-MPT-1100-9D-TH-04	2nd generation diesel engine flange
5	AM-MPT-1100-9D-TH-05	2nd generation pressure relief bolt
6	AM-MPT-1100-9D-TH-06	Split pin
7	AM-MPT-1100-9D-TH-07	Gasket
8	AM-MPT-1100-9D-TH-08	Flange gasket

Fender parts - J

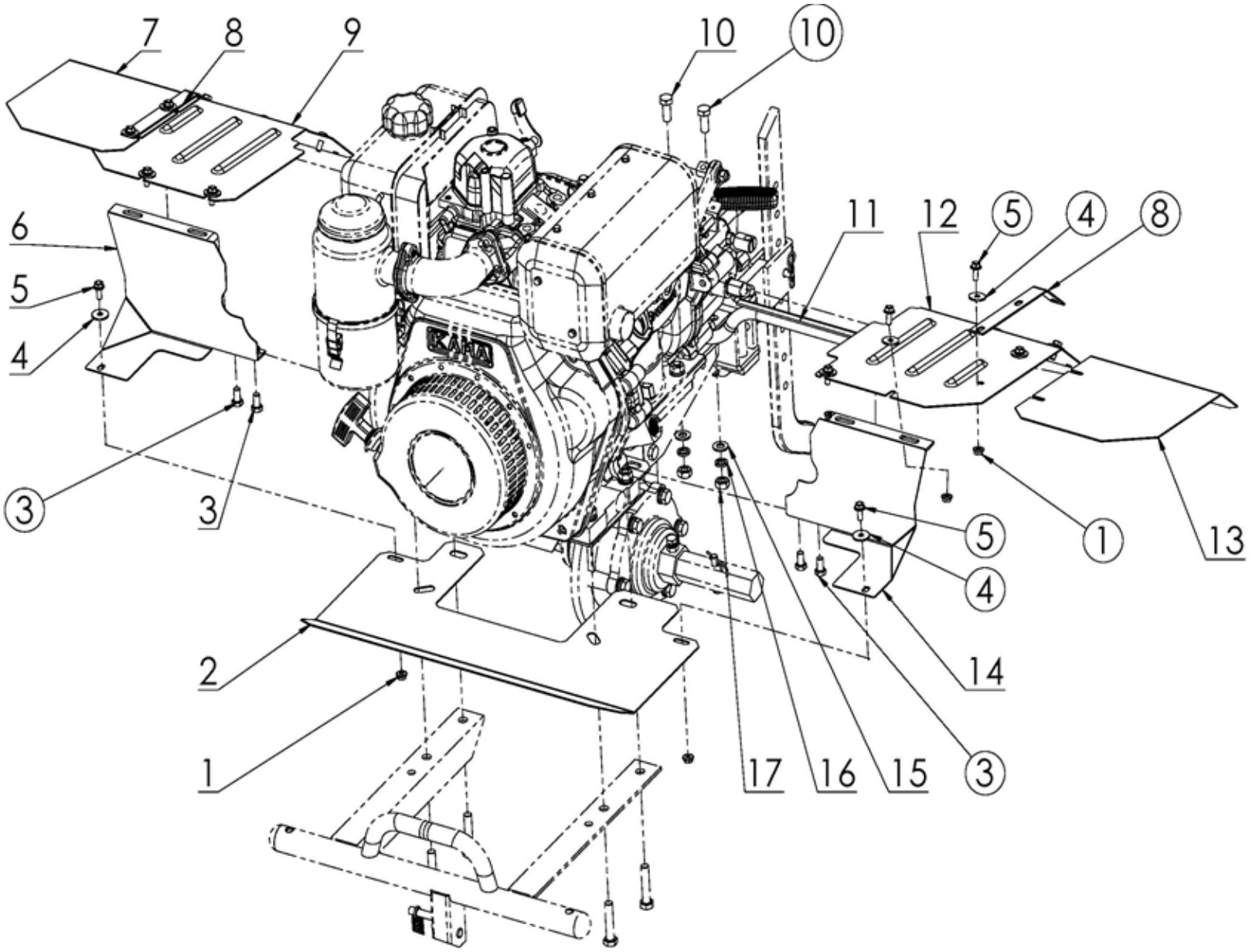

TRANSMISSION DIAGRAM & SPARE PARTS LIST OF AM-MPT-1100-9D/6D / DGB

SL NO	PART NO	DESCRIPTION	SL NO	PART NO	DESCRIPTION
1	AM-MPT-1100-9D-TJ-01	Nut	17	AM-MPT-1100-9D-TJ-17	Nut
2	AM-MPT-1100-9D-TJ-02	Front fender			
3	AM-MPT-1100-9D-TJ-03	Bolt			
4	AM-MPT-1100-9D-TJ-04	Big gasket			
5	AM-MPT-1100-9D-TJ-05	Bolt			
6	AM-MPT-1100-9D-TJ-06	II dust fender right frame(Higher)			
7	AM-MPT-1100-9D-TJ-07	Right vice fender			
8	AM-MPT-1100-9D-TJ-08	Press piece			
9	AM-MPT-1100-9D-TJ-09	Right fender			
10	AM-MPT-1100-9D-TJ-10	Bolt			
11	AM-MPT-1100-9D-TJ-11	Dust fender back frame(Higher)			
12	AM-MPT-1100-9D-TJ-12	Left fender			
13	AM-MPT-1100-9D-TJ-13	Left fender			
14	AM-MPT-1100-9D-TJ-14	II dust fender left frame(Higher)			
15	AM-MPT-1100-9D-TJ-15	Gasket			
16	AM-MPT-1100-9D-TJ-16	Spring washer			

WHEEL PARTS - K

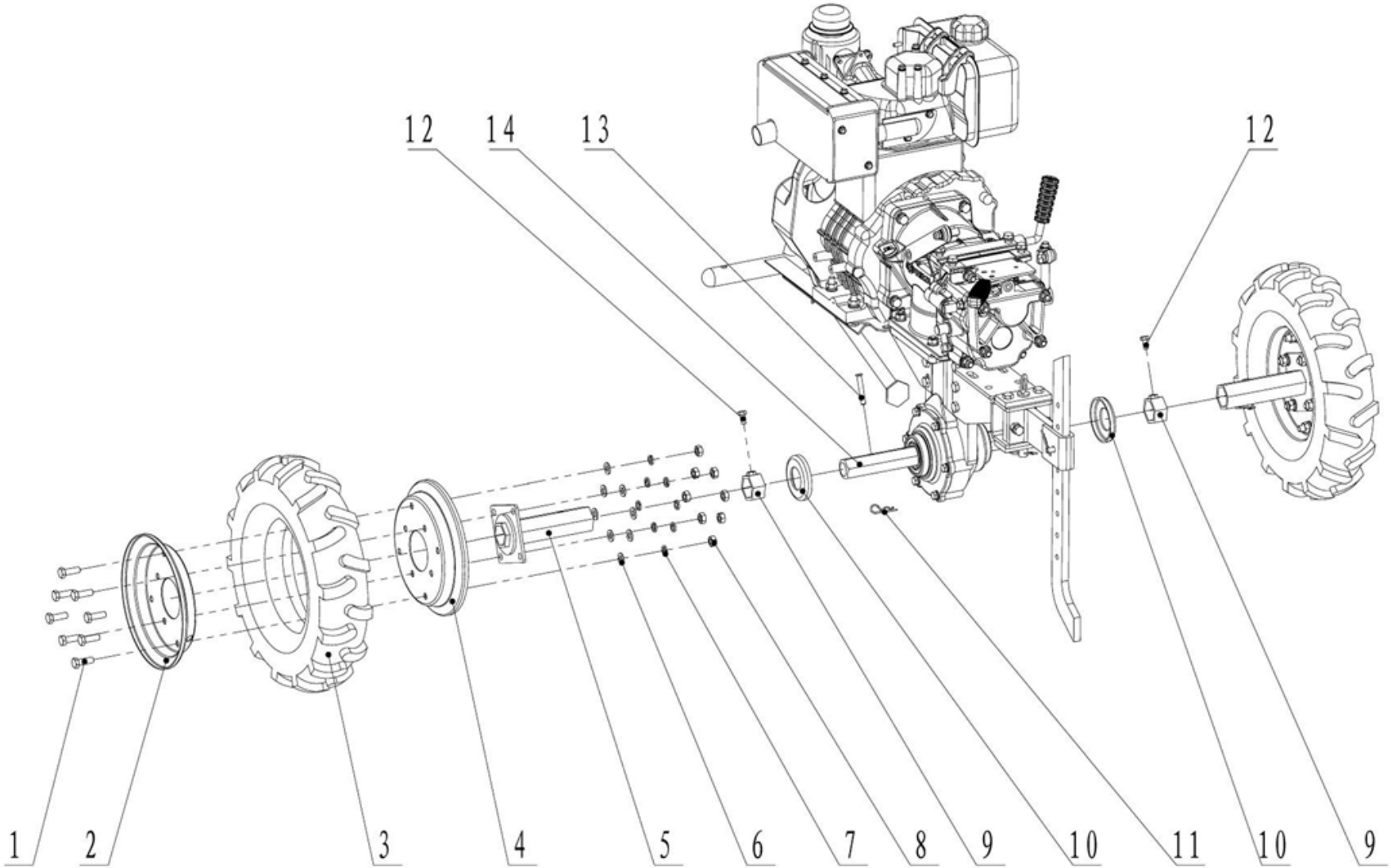

TRANSMISSION DIAGRAM & SPARE PARTS LIST OF AM-MPT-1100-9D/6D / DGB

SL NO	PART NO	DESCRIPTION	SL NO	PART NO	DESCRIPTION
1	AM-MPT-1100-9D-TK-01	Bolt			
2	AM-MPT-1100-9D-TK-02	Outside rim(with hole)			
3	AM-MPT-1100-9D-TK-03	Wheel and tyre			
4	AM-MPT-1100-9D-TK-04	Inner rim			
5	AM-MPT-1100-9D-TK-05	Wheel axle			
6	AM-MPT-1100-9D-TK-06	Gasket			
7	AM-MPT-1100-9D-TK-07	Spring washer			
8	AM-MPT-1100-9D-TK-08	Nut			
9	AM-MPT-1100-9D-TK-09	Hexagon fasten sheath			
10	AM-MPT-1100-9D-TK-10	Dustproof cover			
11	AM-MPT-1100-9D-TK-11	Clip B			
12	AM-MPT-1100-9D-TK-12	Bolt			
13	AM-MPT-1100-9D-TK-13	Pin			
14	AM-MPT-1100-9D-TK-14	Hexagon output shaft			

ROTARY PARTS - L

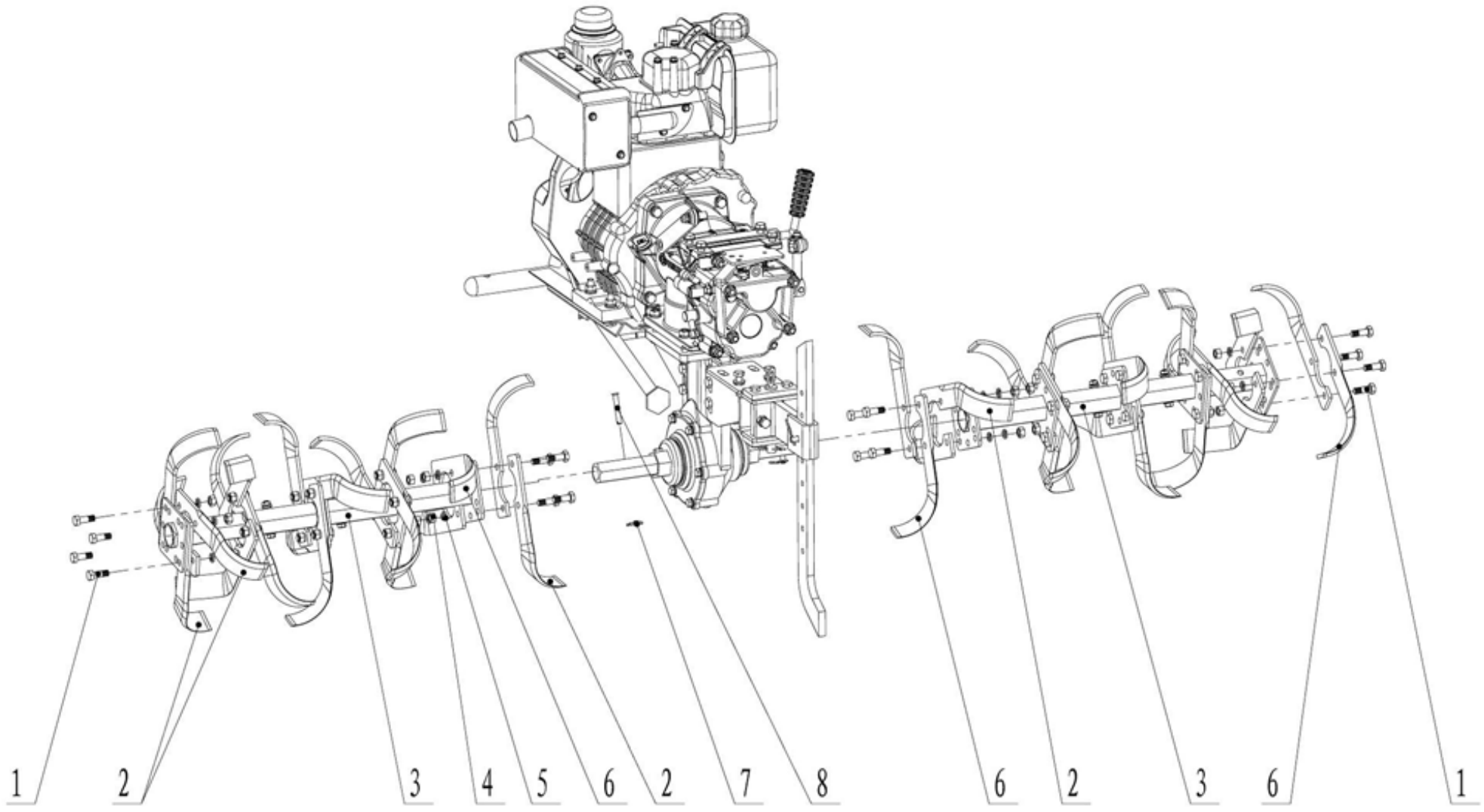

TRANSMISSION DIAGRAM & SPARE PARTS LIST OF AM-MPT-1100-9D/6D / DGB

SL NO	PART NO	DESCRIPTION	SL NO	PART NO	DESCRIPTION
1	AM-MPT-1100-9D-TL-01	Bolt			
		Bolt			
2	AM-MPT-1100-9D-TL-02	Right blades			
		Right blades			
3	AM-MPT-1100-9D-TL-03	3+1 cylinder for 6D			
		3+1+1 cylinder for 9D			
4	AM-MPT-1100-9D-TL-04	Spring washer 10			
		Spring washer 10			
5	AM-MPT-1100-9D-TL-05	Nut			
		Nut			
6	AM-MPT-1100-9D-TL-06	Left blades			
		Left blades			
7	AM-MPT-1100-9D-TL-07	Clip B			
8	AM-MPT-1100-9D-TL-08	Pin			

ELECTRIC START -M

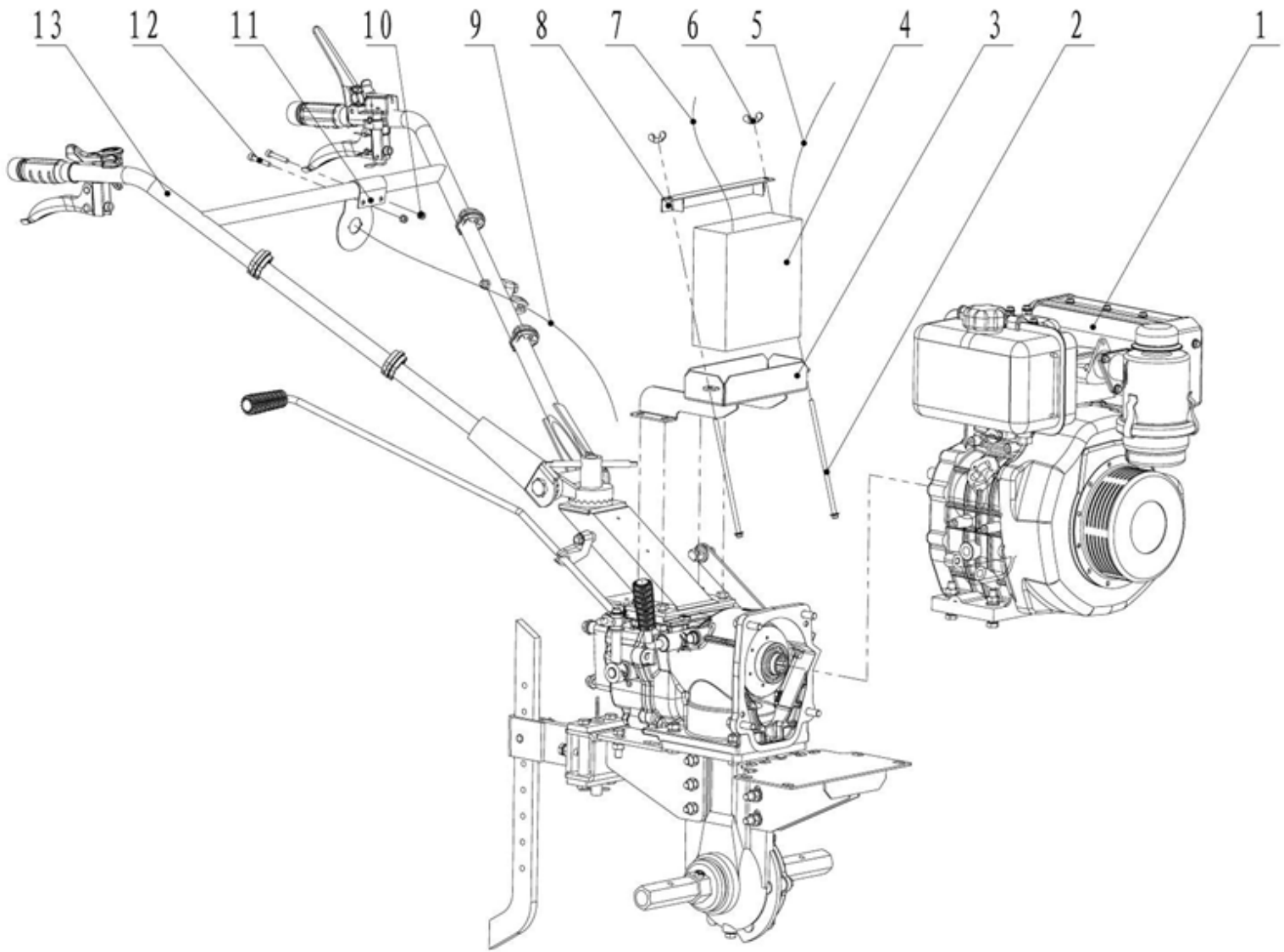

TRANSMISSION DIAGRAM & SPARE PARTS LIST OF AM-MPT-1100-9D/6D / DGB

SL NO	PART NO	DESCRIPTION	SL NO	PART NO	DESCRIPTION
1	AM-MPT-1100-9D-TM-01	178FE diesel engine	13	AM-MPT-1100-9D-TM-13	Handle
		186FBE diesel engine			
2	AM-MPT-1100-9D-TM-02	Bolt			
		Bolt			
3	AM-MPT-1100-9D-TM-03	II battery(Higher)			
		III battery box			
4	AM-MPT-1100-9D-TM-04	18Ah battery			
		36Ah battery			
5	AM-MPT-1100-9D-TM-05	Battery cable			
		Battery cable			
6	AM-MPT-1100-9D-TM-06	Butterfly nut			
7	AM-MPT-1100-9D-TM-07	Battery cable			
		Battery cable			
8	AM-MPT-1100-9D-TM-08	Battery press piece			
		Batteray press piece			
9	AM-MPT-1100-9D-TM-09	Eletric start controlling cable			
10	AM-MPT-1100-9D-TM-10	Locked nut			
11	AM-MPT-1100-9D-TM-11	eletric start limit block			
12	AM-MPT-1100-9D-TM-12	Bolt			

9D differential Gear Box - A

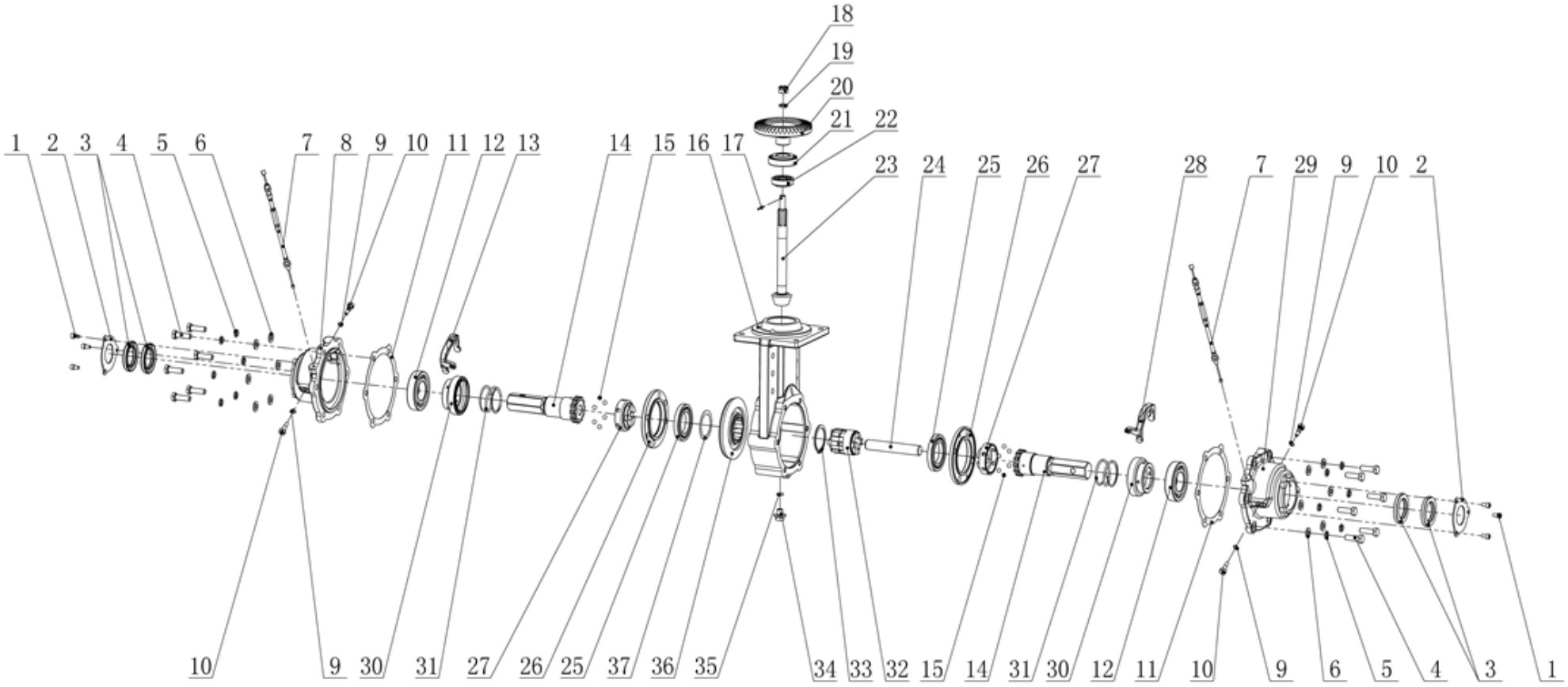

TRANSMISSION DIAGRAM & SPARE PARTS LIST OF AM-MPT-1100-9D/6D / DGB

SL NO	PART NO	DESCRIPTION	SL NO	PART NO	DESCRIPTION
1	AM-MPT-1100-DGB-A01	Hexagon socket head bolt	17	AM-MPT-1100-DGB-A17	Split pin
2	AM-MPT-1100-DGB-A02	Cover	18	AM-MPT-1100-DGB-A18	Hexagon Slotted Thin Nut
3	AM-MPT-1100-DGB-A03	Lip-shaped oil seal	19	AM-MPT-1100-DGB-A19	Spring washer
4	AM-MPT-1100-DGB-A04	Hexagon head bolt	20	AM-MPT-1100-DGB-A20	Driven bevel gear
5	AM-MPT-1100-DGB-A05	Spring washer	21	AM-MPT-1100-DGB-A21	Tapered roller bearing
6	AM-MPT-1100-DGB-A06	Flat washer	22	AM-MPT-1100-DGB-A22	Tapered roller bearing
7	AM-MPT-1100-DGB-A07	Steering cable	23	AM-MPT-1100-DGB-A23	Bevel gear shaft
8	AM-MPT-1100-DGB-A08	Left end cap	24	AM-MPT-1100-DGB-A24	Mandrel
9	AM-MPT-1100-DGB-A09	O-ring	25	AM-MPT-1100-DGB-A25	Deep groove ball bearing
10	AM-MPT-1100-DGB-A10	Fork shaft	26	AM-MPT-1100-DGB-A26	Bearing seat
11	AM-MPT-1100-DGB-A11	Walking box end cover pad	27	AM-MPT-1100-DGB-A27	Land
12	AM-MPT-1100-DGB-A12	Deep groove ball bearing	28	AM-MPT-1100-DGB-A28	Right fork
13	AM-MPT-1100-DGB-A13	Left fork	29	AM-MPT-1100-DGB-A29	Right end cap
14	AM-MPT-1100-DGB-A14	Half shaft	30	AM-MPT-1100-DGB-A30	Steering wheel
15	AM-MPT-1100-DGB-A15	steel ball	31	AM-MPT-1100-DGB-A31	Steering clutch return compression spring

TRANSMISSION DIAGRAM & SPARE PARTS LIST OF AM-MPT-1100-9D/6D / DGB

SL NO	PART NO	DESCRIPTION	SL NO	PART NO	DESCRIPTION
33	AM-MPT-1100-DGB-A33	Circlip for shaft			
34	AM-MPT-1100-DGB-A34	Oil drain bolt			
35	AM-MPT-1100-DGB-A35	O-ring seal			
36	AM-MPT-1100-DGB-A36	Walking bevel gear			
37	AM-MPT-1100-DGB-A37.1	Adjusting pad A			
	AM-MPT-1100-DGB-A37.2	Adjusting pad B			

Differential left & Right Clutch cable- B

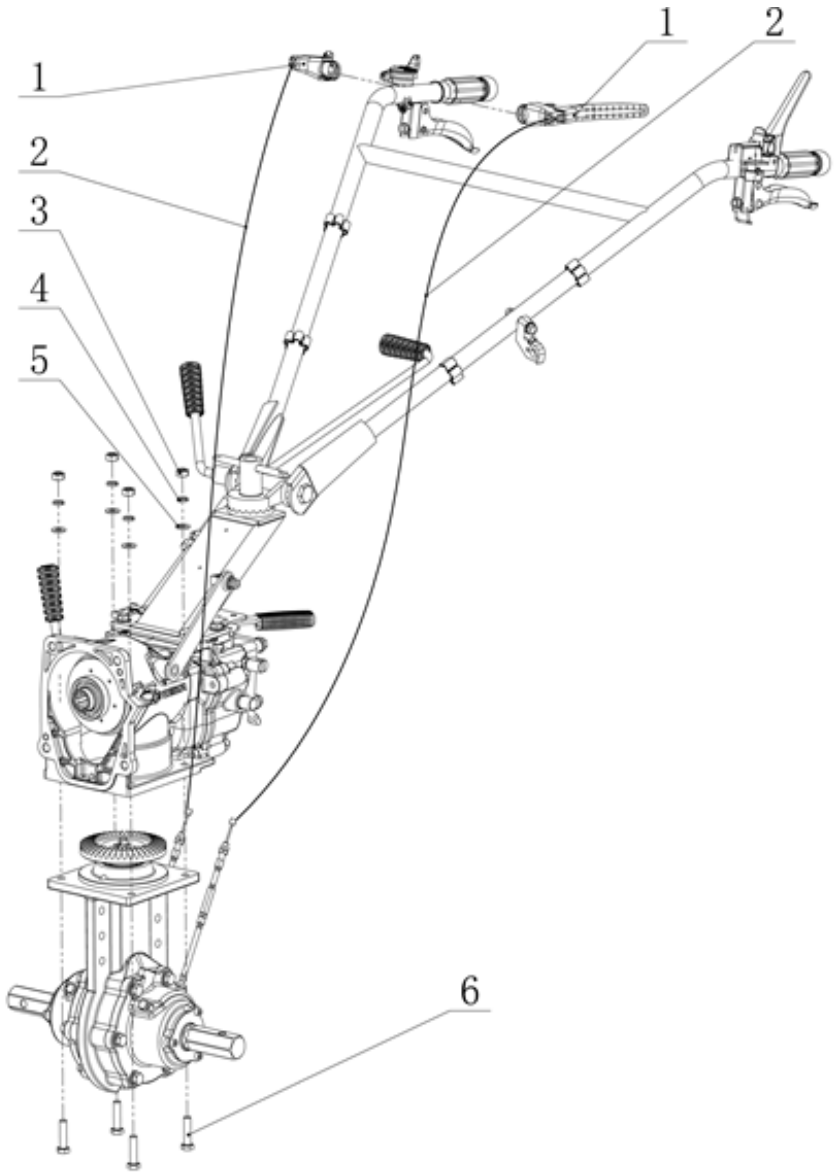

SL NO	PART NO	DESCRIPTION
1	AM-MPT-1100-DGB-B01	Steering clutch handle
2	AM-MPT-1100-DGB-B02	Steering cable
3	AM-MPT-1100-DGB-B03	Hex nut
4	AM-MPT-1100-DGB-B04	Spring washer
5	AM-MPT-1100-DGB-B05	Flat washer
6	AM-MPT-1100-DGB-B06	Hexagon head bolt

WARRANTY CARD

CUSTOMER COPY

DATE _____

PURCHASERS NAME & ADDRESS

_____

_____

DATE OF DELIVERY

CUSTOMER SIGN

_____

DEALERS OFFICIAL SEAL

DEALERS SIGN

_____

PRODUCT NAME

PRODUCT SERIAL NO.

INVOICE/DN NO.

I/Will accept the terms and conditions of warranty as in the warranty card

DEALERS COPY

DATE _____

PURCHASERS NAME & ADDRESS

_____

_____

DATE OF DELIVERY

CUSTOMER SIGN

_____

DEALERS OFFICIAL SEAL

DEALERS SIGN

_____

PRODUCT NAME

PRODUCT SERIAL NO.

INVOICE/DN NO.

I/Will accept the terms and conditions of warranty as in the warranty card

COMPANY COPY

DATE _____

PURCHASERS NAME & ADDRESS

_____

_____

DATE OF DELIVERY

CUSTOMER SIGN

_____

DEALERS OFFICIAL SEAL

DEALERS SIGN

_____

PRODUCT NAME

PRODUCT SERIAL NO.

INVOICE/DN NO.

I/Will accept the terms and conditions of warranty as in the warranty card

1.LIMITED WARRANTY PERIOD : For a period of six months from the date of Sale / delivery of the product which ever is earlier. 2. LIMITED WARRANTY OBLIGATION : Replacement of defective part(s) by authorized dealer are free of charges. If found defective by reasons of defective material / poor workmanship, parts will be replaced and there will be no value re-imbursement. 3. TERMS & CONDITIONS : a. Claims under warranty will be accepted on submission of Warranty Card duly filled and stamped by authorized dealer together with the original purchase document. : b. Shipping / transportation / Incidental charges incurred in replacing defective parts under warranty shall be borne by the purchaser

WARRANTY null & void if

(i) Lack of maintenance, (ii) Incorrect use of the machine or tampering, (iii) Use of non-genuine spare parts, (iv) Usage of acids, solvents, or any flammable materials, (v) Non-usage of filter water / clear water / soft water & using water above 40°C temperature, (vi) While using the pressure washers to draw water which is contaminated with dust & solvents (eg. paint thinners, gasoline, oil, etc.), (vii) Repair done by unauthorized service people, (viii) Those parts subject to wear & tear due to normal operations and plastic parts, rubber items etc, (ix) Loose connections, faulty electrical fixtures & fluctuations in power supply.

4. Should any failure occur during or after the warranty period, customer does not have the right to interrupt payment / price discount.
5. Incidental or consequential damages like inconvenience commercial loss, loss of tie, mental agony etc.
6. Loss of any nature due to operation or non-operation is not covered under warranty.
7. All free service are at Dealer's service point only.
8. Warranty ceases if service is not done periodically.
9. The attached card should be completed and returned to Ratnagiri Impex Pvt. Ltd. for registration immediately after sale / delivery.
10. The warranty is void unless you register the warranty card with Ratnagiri Impex Pvt. Ltd.
11. The decision of Ratnagiri Impex Pvt. Ltd., in settling the warranty is final in all respects.
12. All disputes are subject to Bangalore Courts Jurisdiction

1. LIMITED WARRANTY PERIOD : For a period of six months from the date of Sale / delivery of the product which ever is earlier. 2. LIMITED WARRANTY OBLIGATION : Replacement of defective part(s) by authorized dealer are free of charges. If found defective by reasons of defective material / poor workmanship, parts will be replaced and there will be no value re-imbursement. 3. TERMS & CONDITIONS : a. Claims under warranty will be accepted on submission of Warranty Card duly filled and stamped by authorized dealer together with the original purchase document. : b. Shipping / transportation / Incidental charges incurred in replacing defective parts under warranty shall be borne by the purchaser.

WARRANTY null & void if

(i) Lack of maintenance, (ii) Incorrect use of the machine or tampering, (iii) Use of non-genuine spare parts, (iv) Usage of acids, solvents, or any flammable materials, (v) Non-usage of filter water / clear water / soft water & using water above 40°C temperature, (vi) While using the pressure washers to draw water which is contaminated with dust & solvents (eg. paint thinners, gasoline, oil, etc.), (vii) Repair done by unauthorized service people, (viii) Those parts subject to wear & tear due to normal operations and plastic parts, rubber items etc, (ix) Loose connections, faulty electrical fixtures & fluctuations in power supply.

4. Should any failure occur during or after the warranty period, customer does not have the right to interrupt payment / price discount.
5. Incidental or consequential damages like inconvenience commercial loss, loss of tie, mental agony etc.
6. Loss of any nature due to operation or non-operation is not covered under warranty.
7. All free service are at Dealer's service point only.
8. Warranty ceases if service is not done periodically.
9. The attached card should be completed and returned to Ratnagiri Impex Pvt. Ltd. for registration immediately after sale / delivery.
10. The warranty is void unless you register the warranty card with Ratnagiri Impex Pvt. Ltd.
11. The decision of Ratnagiri Impex Pvt. Ltd., in settling the warranty is final in all respects.
12. All disputes are subject to Bangalore Courts Jurisdiction

1. LIMITED WARRANTY PERIOD : For a period of six months from the date of Sale / delivery of the product which ever is earlier. 2. LIMITED WARRANTY OBLIGATION : Replacement of defective part(s) by authorized dealer are free of charges. If found defective by reasons of defective material / poor workmanship, parts will be replaced and there will be no value re-imbursement. 3. TERMS & CONDITIONS : a. Claims under warranty will be accepted on submission of Warranty Card duly filled and stamped by authorized dealer together with the original purchase document. : b. Shipping / transportation / Incidental charges incurred in replacing defective parts under warranty shall be borne by the purchaser.

WARRANTY null & void if

(i) Lack of maintenance, (ii) Incorrect use of the machine or tampering, (iii) Use of non-genuine spare parts, (iv) Usage of acids, solvents, or any flammable materials, (v) Non-usage of filter water / clear water / soft water & using water above 40°C temperature, (vi) While using the pressure washers to draw water which is contaminated with dust & solvents (eg. paint thinners, gasoline, oil, etc.), (vii) Repair done by unauthorized service people, (viii) Those parts subject to wear & tear due to normal operations and plastic parts, rubber items etc, (ix) Loose connections, faulty electrical fixtures & fluctuations in power supply.

4. Should any failure occur during or after the warranty period, customer does not have the right to interrupt payment / price discount.
5. Incidental or consequential damages like inconvenience commercial loss, loss of tie, mental agony etc.
6. Loss of any nature due to operation or non-operation is not covered under warranty.
7. All free service are at Dealer's service point only.
8. Warranty ceases if service is not done periodically.
9. The attached card should be completed and returned to Ratnagiri Impex Pvt. Ltd. for registration immediately after sale / delivery.
10. The warranty is void unless you register the warranty card with Ratnagiri Impex Pvt. Ltd.
11. The decision of Ratnagiri Impex Pvt. Ltd., in settling the warranty is final in all respects.
12. All disputes are subject to Bangalore Courts Jurisdiction

1st service coupon

ISO 9001 : 2015 CERTIFIED COMPANY

FREE SERVICE COUPON (30DAYS/30HRS. WHICHEVER IS EARLIER

MODEL

SERIAL NUMBER

PDI DATE

SERVICE NO.

PURCHASE BILL NO.

DATE

DEALERS OFFICE SEAL

OPERATIONS

1. Check and test the fuel mixture
2. check and clean the air filter
3.Check , clean and adjust the spark plug
4. Check and adjust the carburetor tuning
5. Check and sparken the cutting tools
6.Product familirisation on usage
7. Start and check the noise, vibration, loosen etc..
8. Routine maintenance and shortage.

FREE SERVICE COUPON (30DAYS/30HRS. WHICHEVER IS EARLIER

MODEL

SERIAL NUMBER

PDI DATE

SERVICE NO.

PURCHASE BILL NO.

DATE

DEALERS OFFICE SEAL

OPERATIONS

1. Check and test the fuel mixture
2. check and clean the air filter
3.Check , clean and adjust the spark plug
4. Check and adjust the carburetor tuning
5. Check and sparken the cutting tools
6.Product familirisation on usage
7. Start and check the noise, vibration, loosen etc..
8. Routine maintenance and shortage.

FREE SERVICE COUPON (30DAYS/30HRS. WHICHEVER IS EARLIER

MODEL

SERIAL NUMBER

PDI DATE

SERVICE NO.

PURCHASE BILL NO.

DATE

DEALERS OFFICE SEAL

OPERATIONS

1. Check and test the fuel mixture
2. check and clean the air filter
3.Check , clean and adjust the spark plug
4. Check and adjust the carburetor tuning
5. Check and sparken the cutting tools
6.Product familirisation on usage
7. Start and check the noise, vibration, loosen etc..
8. Routine maintenance and shortage.

DOS & DONTS

1. Always read the instruction manual supplied along with the equipments and understand the correct installation and operating procedures before attempting to use the equipments.

2. It is important to use the personal protection equipments such as head helmet with visor, ear defenders, goggles, safety gloves, cut resistant shoes, trousers and jackets while operating potentially dangerous machines

3. Avoid untrained persons using the equipments. Children must not be allowed to handle these equipments

4. Always use genuine spares and accessories in repairs and usage to derive maximum life of the equipments.

5. Always keep the equipments in good working condition to minimize loss of output as well as to reduce the pollution and save the environment

6.Do not use the machine within range of persons unless they wear protective clothing

7. Do not operate the machine when fatigued or under the influence of alcohol or drugs

8. When the machine is running, please maintain a constant water supply. Without water circulation will damage the sealing rings of the machine.

9. For more query kindly contact for our Service Center/Dealer/ franchise

Agrimate Army For Pest Control

ANY WHERE - ANY TIME - ANY CROP

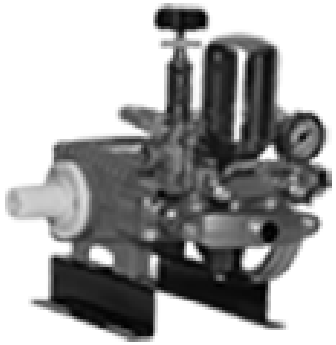

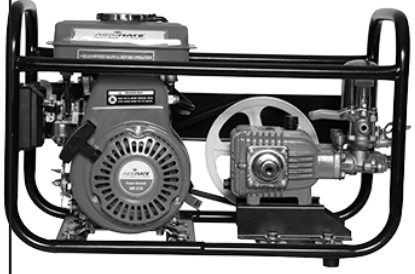

Marketed by:

ratnagiri impex

BRINGING YOU THE FUTURE... NOW

RATNAGIRI IMPEX PVT., LTD.,

Annapurna House, #1 / 1G, 7th Cross, New Guddadahalli

Mysore Road, Bangalore - 560 026

Missed Call : 7393 938 938

Email: ask@agrimart.in